BLADE BLOCK-50 ASSY
GX-3000
(S/N'S 0001-0050)
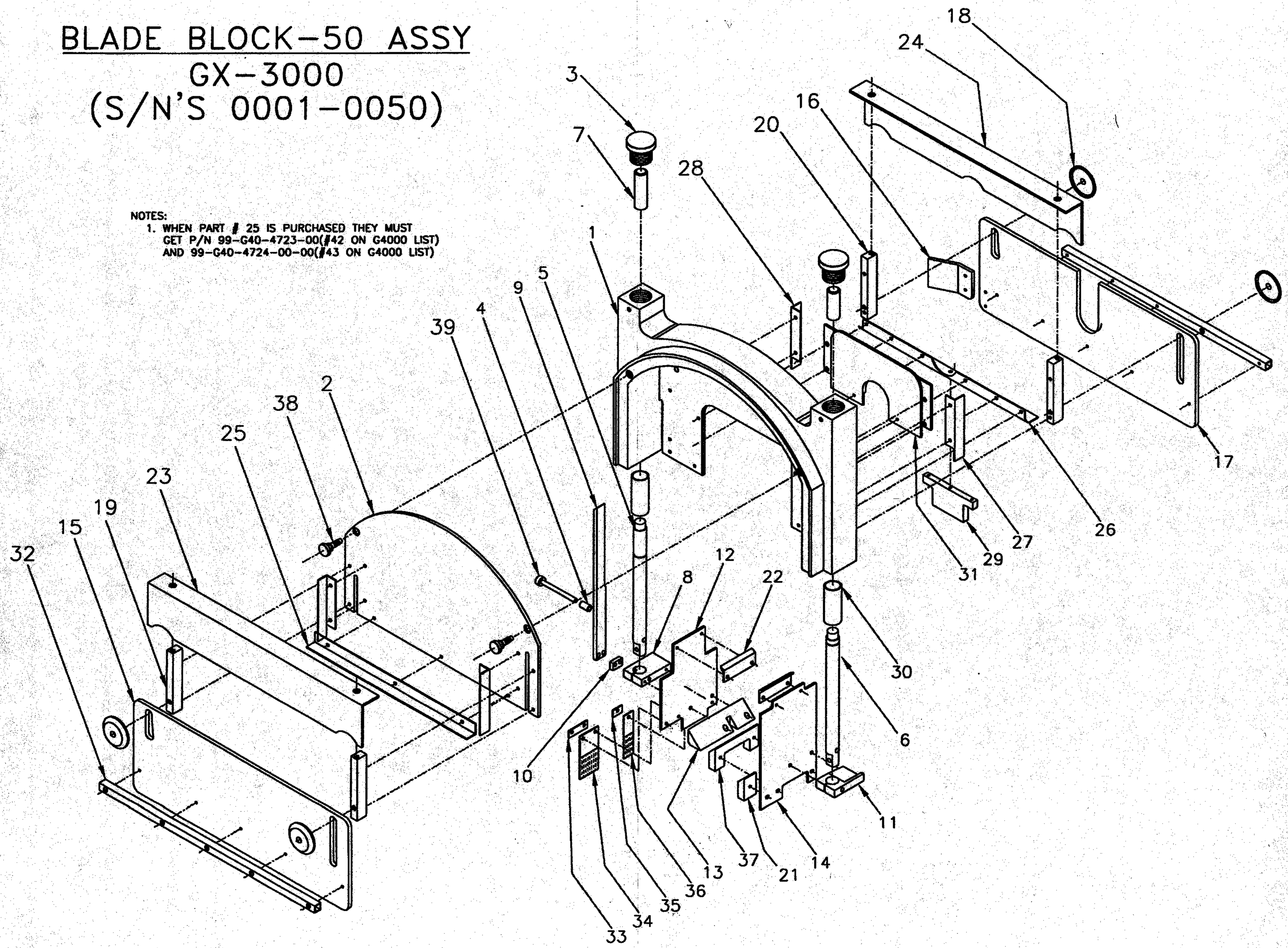
NOTES:
1. WHEN PART # 25 IS PURCHASED THEY MUST GET P/N 99-G40-4723-00(#42 ON G4000 LIST) AND 99-G40-4724-00-00(#43 ON G4000 LIST)